WWW.ACTINI.COM

ACTINI

Biopharma

DECONTAMINATION & STERILIZATION

A COMPLETE RANGE OF THERMAL SYSTEMS

FOR LABS & BIOPRODUCTION SITES

ACTINI Biopharma

Located in Evian, France, ACTINI has over **65 years of experience** and a superb reputation as a global leader in designing, manufacturing and commissioning of heat treatment equipment.

Expert in both liquid sterilization and effluent decontamination, ACTINI offers a complete range of standard and custom-made systems designed to meet the needs of contained laboratories, vaccines makers, biotechs and cosmetic facilities.

OUR EXPERTISE

DESIGN

- System design as per customers' needs
- Equipment specifications
- Process Flow Diagram
- 3D Design
- System layout

FABRICATION

- Manufacturing
- Assembly
- Automation
- Documentation
- Inspection & testing (FAT)

FIELD SERVICES

- Shipment
- Installation & Commissioning
- Testing (SAT)
- Training

SUPPORT

- Qualification
- Maintenance
- Troubleshooting
- Audit & upgrade

An Experience of more than **400 operational units** installed in vaccine manufacturing facilities, biotech sites, research centers and laboratories worldwide.

ACTINI Biopharma

DECONTAMINATION PRODUCTLINE

BSL 1 - BSL 2 - BSL 3 - BSL 4

STANDARD SYSTEMS WITH OPTIONS

produced in series & short delivery times

MODELS		DAILY CAPACITIES*	TECHNOLOGIES	ENERGIES
KUBE patented system		100 liters	Batch	Electricity
SINK patented system		100 liters	Batch	Electricity
MICRO patented system		300 liters	Batch	Electricity
MICROSTEAM		1,000 liters	Batch	Tangential steam injection
ULTIBATCH patented system	**BATCH - single**	1,800 liters	Batch	Tangential steam injection
	BATCH - double	3,600 liters	Batch	Tangential steam injection
ULTIMATE	**ULT-1000**	5,000 to 16,000 liters	Continuous flow	Steam
ULTIMATE PLUS	**ULT-3000**	10,000 to 48,000 liters	Continuous flow	Steam
	ULT-3000 + EXT3000(x1)	30,000 to 96,000 liters	Continuous flow	Steam
	ULT-3000 + EXT3000(x2)	50,000 to 144,000 liters	Continuous flow	Steam
	ULT-3000 + EXT3000(x3)	140,000 to 192,000 liters	Continuous flow	Steam

PRE-ENGINEERED SOLUTIONS WITH CUSTOMIZATIONS

designed as per your specifications

MODELS		DAILY CAPACITIES*	TECHNOLOGIES	ENERGIES
CYCLOBATCH SYSTEMS patented systems	**BDS-30**	100 to 1,000 liters	Batch	Tangential steam injection
	BDS-300	1,000 to 3,500 liters	Batch	Tangential steam injection
	BDS-750	3,500 to 7,500 liters	Batch	Tangential steam injection
	BDS-1600	7,500 to 12,000 liters	Batch	Tangential steam injection
	BDS-2200	12,000 to 16,000 liters	Batch	Tangential steam injection
CONTINUOUS SYSTEMS patented systems	**FDS-500**	2,500 to 8,000 liters	Continuous flow	Electricity
	FDS-1000	5,000 to 16,000 liters	Continuous flow	Steam
	FDS-3000	15,000 to 48,000 liters	Continuous flow	Steam
	FDS-6000	30,000 to 96,000 liters	Continuous flow	Steam
	FDS-12000	60,000 to 192,000 liters	Continuous flow	Steam
	FDS^{PLUS}	Over 190,000 liters	Continuous flow	Steam

Specific design for BSL 4 containment & ATEX requirements

* Continuous daily capacity: based on a 16-hour-a-day operation. Our continuous systems can operate up to 24 hours a day depending on operating conditions.
* Cyclobatch daily capacity: based on a 20-hour-a-day operation

ACTINI Biopharma

KUBE

up to 100 l/day

STANDARD DECONTAMINATION SYSTEMS WITH OPTIONS

Capacity: **Up to 100 liters per day**
Effluent: **Water-like**
Storage capacity: **25 liters**

Energy: **Electricity**
Single-phase 230 V - 50-60 Hz
1.1 kW / 5 A

Treatment program: 135°C (275°F) for 2 minutes (adjustable)
Decontamination: F_0 50

Fully automatic operation with monitored cycles
Remote control available
Batch report

No use of chemicals
Safe for the workers and for the environment

Layout (mm): **600 x 700 (connections included)**
Height (mm): **820**

Model with **Containment option**:
Layout (mm): **640 x 810 (connections included)**
Height (mm): **1,220**

Stop autoclaving liquids, using bleach or paying for off-site treatment!

- Guaranteed decontamination
- Validation of the treatment efficiency by sensors
- Automatic and monitored cycles

Connection to:

- Biosafety cabinets to collect & treat effluent directly
- Emergency showers
- Beneath existing sinks

KUBE MODEL

Patents: FR1355689 / EP14738747.6 / CA2915774

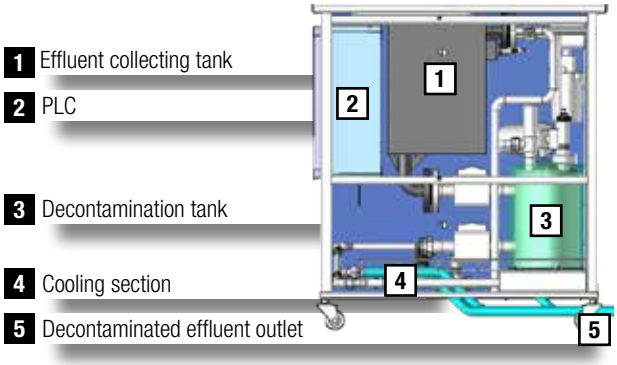

ACTINI Biopharma

SINK

up to 100 l/day

STANDARD DECONTAMINATION SYSTEMS WITH OPTIONS

Capacity:	**Up to 100 liters per day**
Effluent:	**Water-like**
Storage capacity:	**25 liters**
Energy:	**Electricity** **Single-phase 230 V - 50-60 Hz** **1.1 kW / 5 A**
Treatment program:	135°C (275°F) for 2 minutes (adjustable)
Decontamination:	F_0 50
	Fully automatic operation with monitored cycles Remote control available Batch report
	No use of chemicals Safe for the workers and the environment
Layout (mm):	**600 x 700**
Height (mm):	**1,300**

Stop autoclaving liquids, using bleach or paying for off-site treatment and...
Get a safe water point in your lab!

- Guaranteed decontamination
- Validation of the treatment efficiency by sensors
- Automatic and monitored cycles

Stand Alone Unit

- Automatic water release
- Large Varicor® sink to discard research materials or wash

SINK MODEL

Patents: FR1355689 / EP14738747.6 / CA2915774

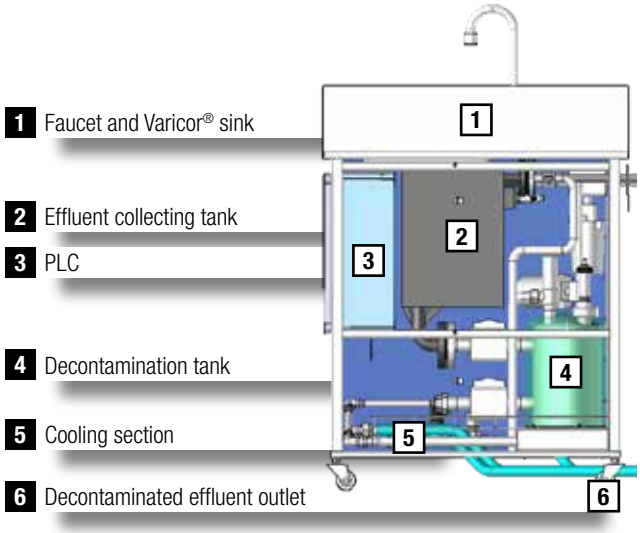

ACTINI Biopharma

MICRO

up to 300 l/day

STANDARD DECONTAMINATION SYSTEMS WITH OPTIONS

Capacity:	**Up to 300 liters per day**
Effluent:	**Water-like**
Storage capacity:	- **250 liters** - **400 liters (option)**
Energy:	**Electricity** **Single-phase 230 V - 50-60 Hz** 3 kW / 13 A With energy recovery section No chilled water required
Treatment program:	135°C (275°F) for 2 minutes (adjustable)
Decontamination:	F_0 50
Model 250 liters:	
Layout (mm):	**880 x 1,100**
Height (mm):	**2,100**
Model 400 liters:	
Layout (mm):	**880 x 1,100**
Height (mm):	**2,240**

- Specifically designed for placement in very tight spaces
- «Plug and Play» electricity operated system with energy recovery section
- Tested in our workshops before shipment
- Fully operational as soon as plugged

Automatic operation

- Do not require any manual intervention
- Fully automated, the PLC controls and monitors all the cycles for a safe operation

Affordable solution

- Produced in series, this unit has been designed to fit in the budgets of research centers and university laboratories

MICRO MODEL

Patents: FR1355689 / EP14738747.6 / CA2915774

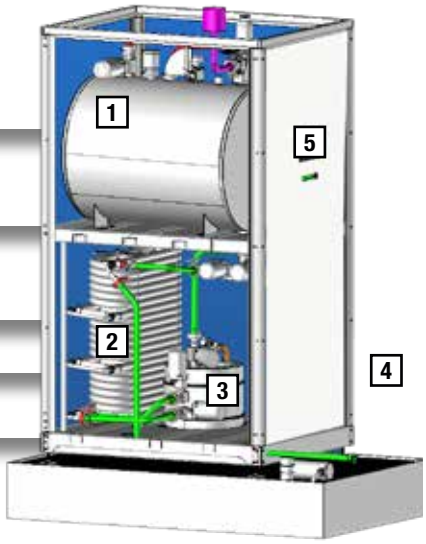

ACTINI Biopharma

MICROSTEAM

up to 1,000 l/day

STANDARD DECONTAMINATION SYSTEMS WITH OPTIONS

Capacity: **Up to 1,000 liters per day**
Effluent: **Water-like**

Storage capacity: - **700 liters**
- 1,000 liters (option)

Energy: **Steam**
Single-phase 230 V - 50 Hz (excluding steam generator)
2.2 kW / 9 A
Steam: 4.5 bars - 24 kW - 30 kg/h
With energy recovery section
No chilled water required

Treatment program: 135°C (275°F) for 2 minutes (adjustable)
Decontamination: F_0 50

Model 700 liters (filter included):
Layout (mm): **1,320 x 1,930**
Height (mm): **2,220**

Model 1,000 liters (filter included):
Layout (mm): **1,320 x 1,930**
Height (mm): **2,420**

- Specifically designed for placement in very tight spaces, this system is very easy to install in existing rooms
- Tested in our workshops before shipment, it will be fully operational as soon as plugged
- If no steam available on site, a steam generator can be integrated with the skid as an option.

Automatic operation

- Fully automated, the PLC controls and monitors all the cycles for a safe operation

MICROSTEAM MODEL

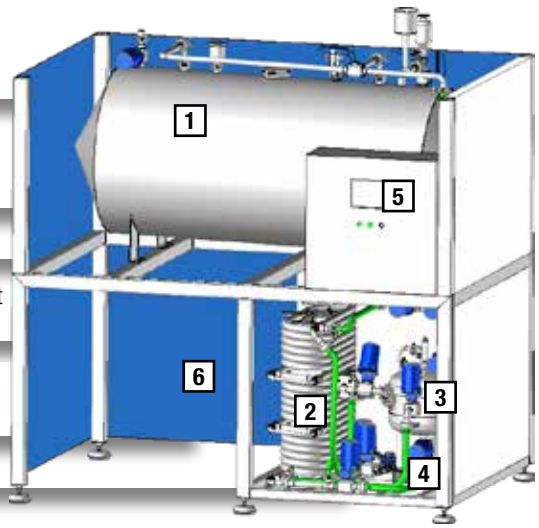

1 Effluent collecting tank
2 Energy recovery section (preheating and cooling)
3 Decontamination tank
4 Decontaminated effluent outlet
5 PLC for automatic management
6 Manual CIP

ACTINI Biopharma

ULTIBATCH

up to 3,600 l/day

STANDARD DECONTAMINATION SYSTEMS WITH OPTIONS

The ULTIBATCH decontamination system has been designed to offer a standard batch solution configurable with options.
This compact and cost-effective model can be provided with one or two kill tanks.

Main Features

- Kill tank(s) with tangential steam injection
- Treatment section with energy recovery system (only with double kill tanks model)
- Tubular cooling section
- Fully instrumented system for an automatic operation

Capacity for single batch:	**1,800 liters per day**
double batch:	**3,600 liters per day**
Effluent:	**Water-like / small particles and viscous products**
Energy:	**Steam** **Chilled water required** **Energy recovery section**
Treatment program:	135°C for 2 minutes or 125°C for 20 minutes* **will impact daily capacity*
Decontamination:	F_0 50
Layout (mm):	**2,100 x 900**
Height (mm):	**2,030**

ULTIBATCH MODEL

Patent: FR1363330

1. Effluent inlet
2. Main kill tank
3. Cooling section
4. Decontaminated effluent outlet
5. Electrical cabinet

OPTION: Additional kill tank & Energy recovery section

Steam management section

6. Steam inlet
7. Condensate outlet

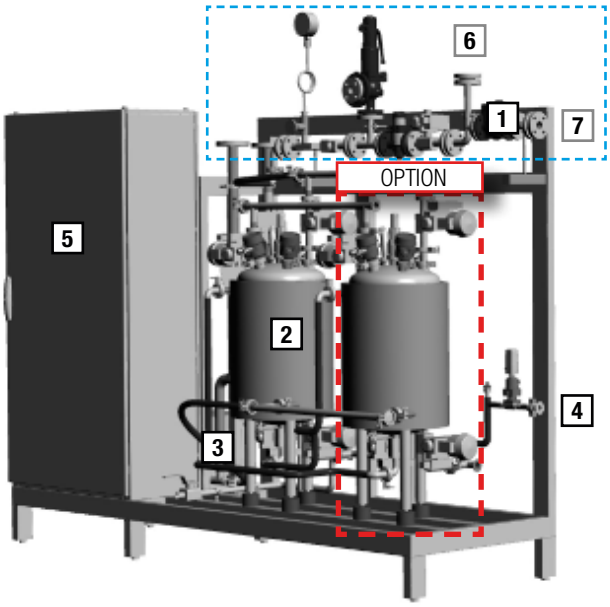

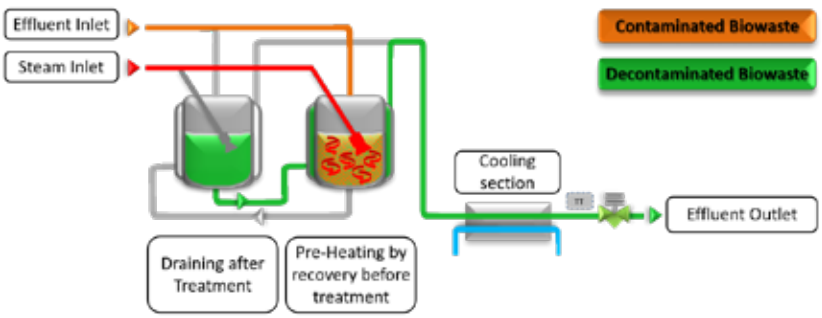

ACTINI Biopharma

CYCLOBATCH

up to 16,000 l/day

CUSTOM-MADE DECONTAMINATION SOLUTIONS

Effluent: **Particularly effective for solids decontamination and high viscosity products**

Energy: **Steam**
Technology: **Patented batch system**

Heating: **Direct steam injection**
Also available with an indirect heating technology (high containment option)

MODELS	USEFUL CAPACITIES	BATCH VOLUMES	AVERAGE DAILY CAPACITIES depending on temperature /time /available steam and cooling water (based on a 20-hour-a-day operation)
BDS-30	30 liters	60 liters	100 to 1,000 liters
BDS-300	300 liters	510 liters	1,000 to 3,500 liters
BDS-750	750 liters	1,250 liters	3,500 to 7,500 liters
BDS-1600	1,600 liters	2,500 liters	7,500 to 12,000 liters
BDS-2200	2,200 liters	3,500 liters	12,000 to 16,000 liters

Features of a unique design

- Tangential steam injection (core treatment)
- No vent filter on the kill tank
- Drained by the pressure generated during the heating cycle
- Reduced noise emission: 75 dBA (vs. 100 dBA for classic batch systems)
- Possible redundancy with 2 kill tanks
- Compact footprint
- No foaming

Reliability

- No vent clogging
- No gaseous discharge
- No pump protects against possible leakage

Cost optimization

- Lower capital investment
- Low maintenance

BDS MODEL

Patent: FR1363330

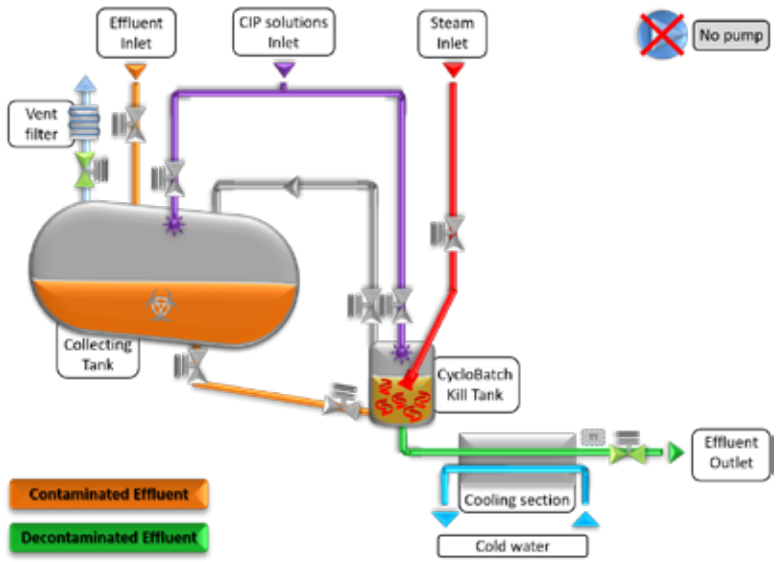

ACTINI Biopharma

ULTIMATE

up to 16,000 l/day

STANDARD DECONTAMINATION SYSTEMS WITH OPTIONS

Capacity: **1,000 liters/hour**
Recommended daily operation: Up to **16 hours per day**
Effluent: **Water-like**

Energy: **Steam**
No chilled water required

Treatment program: 80°C to 135°C (275°F) for 1 minute
Decontamination: F_0 25

Layout (mm): **1,404 x 820**
Height (mm): **2,164**

Main Features

The ULT-1000 decontamination system has been designed to meet the needs of both laboratories and production units. This very cost-effective model gathers all the important basic functions to decontaminate and release your effluent safely.

- CIP tanks for CIP solutions storage
- Pumping system secured by a filter
- Treatment section with energy recovery system
- Fully instrumented system for an automatic operation
- Possible fast-track delivery

ULT MODEL

1. Contaminated effluent inlet
2. Starting tank
3. Process pump
4. Energy recovery & Heating exchangers
5. Holding exchanger
6. Decontaminated effluent outlet
7. Electrical cabinet

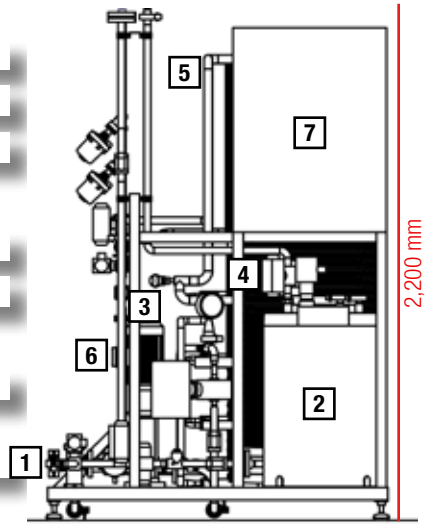

ACTINI Biopharma

ULTIMATE PLUS

up to 192,000 l/day

STANDARD DECONTAMINATION SYSTEMS WITH OPTIONS

Configuration ULT3000 + EXT3000

Capacity: **Main skid 3,000 liters/hour**
Each add-on: 3,000 liters/hour
Possibility to connect 3 add-ons of 3,000 lph
Capacity up to 12,000 lph

Recommended daily operation: Up to **16 hours per day**
Effluent: **Water-like**

Energy: **Steam**
No chilled water required

Treatment program: 80°C to 135°C (275°F) for 1 minute (2 minutes as option)
Decontamination: F_0 25 (F_0 50 as an option)

Height (mm): **2,350**
Layout: Main skid ULT3000 (mm): **1,700 x 2,480**
Extension EXT3000 (mm): **940 x 2,530**

Main Features

- Modular system
- Capacity upgrade easy to implement in connecting 3,000 lph modules
- Really compact add-ons
- Automatic operation controlled from the main skid. No automation study required when connecting add-ons.
- Possibility to double the pumping system for redundancy.

ULT+ MODEL

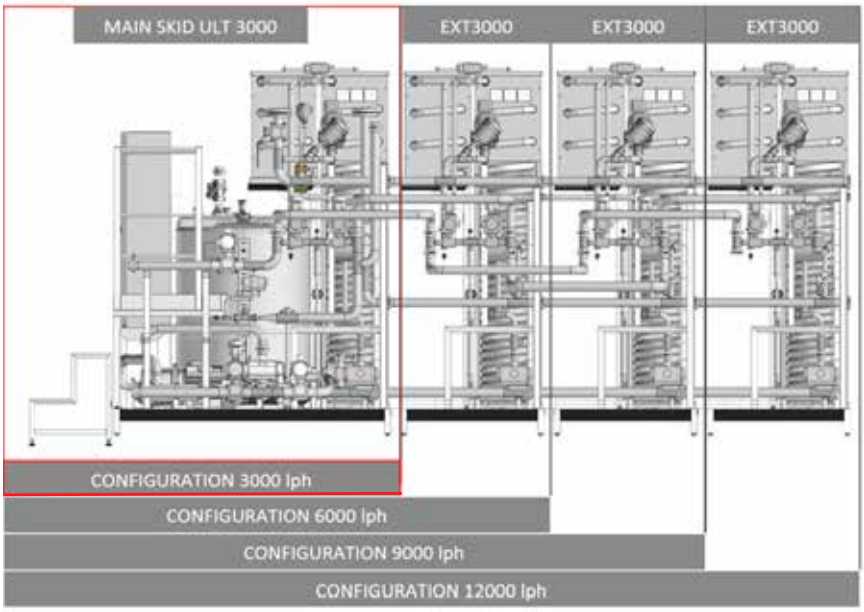

ACTINI Biopharma

CONTINUOUS
EFFLUENT DECONTAMINATION SYSTEM
up to 350,000 l/day... and more

CUSTOM-MADE DECONTAMINATION SOLUTIONS

Effluent: **Water-like**
Recommended daily operation for dimensioning: **16 hours per day**

Energy: **Electricity or Steam**
Integrated energy recovery system

Technology: **All-welded tubular exchanger**

Very compact design
(for example, less than 9 sqm to treat 100,000 lpd)

MODELS	HOURLY FLOW RATES	DAILY CAPACITIES	ENERGIES
FDS-500	500 liters	2,500 to 8,000 liters	Electricity - Actijoule®
FDS-1000	1,000 liters	5,000 to 16,000 liters	Steam - Tube in Tube
FDS-3000	3,000 liters	15,000 to 48,000 liters	Steam - Tube in Tube
FDS-6000	6,000 liters	30,000 to 96,000 liters	Steam - Tube in Tube
FDS-12000	12,000 liters	60,000 to 192,000 liters	Steam - Tube in Tube
FDS^{PLUS}	Designed as per needs	Over 190,000 liters	Steam - Tube in Tube

Design

- All-welded tubular design to avoid any risk of leakage and cross-contamination
- Choice of the construction materials based on the aggressiveness of the agents present in the effluent (high chloride resistant)

Operation

- Redundant control of the decontamination parameters
- PLC-controlled cycles and records
- Automatic self-sanitation cycle

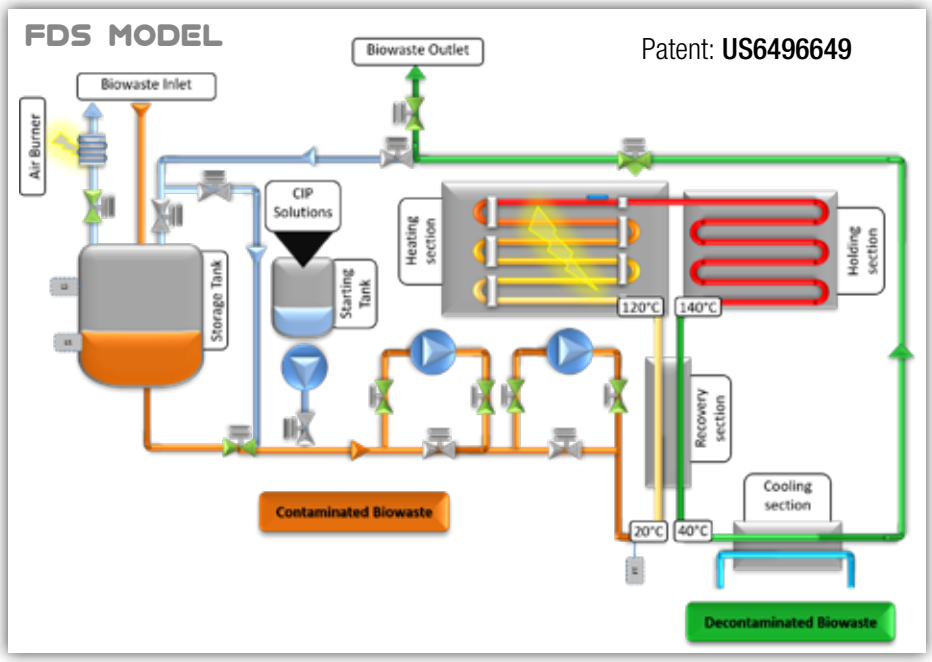

WWW.ACTINI.COM

NEUTRALIZATION PRODUCTLINE

Batch & Continuous

BATCH SYSTEMS

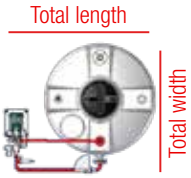

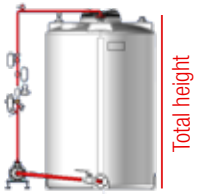

MODELS	DAILY NEUTRALIZED VOLUME	NEUTRALIZATION TANK VOLUME	DIMENSIONS		
			LENGTH	WIDTH	HEIGHT
BNS-300	1,000 to 3,500 liters	530 liters	1,290 mm	990 mm	1,180 mm
BNS-750	3,500 to 7,500 liters	1,200 liters	1,500 mm	1,200 mm	1,690 mm
BNS-1600	7,500 to 12,000 liters	2,850 liters	1,920 mm	1,470 mm	2,040 mm
BNS-2200	12,000 to 16,000 liters	4,200 liters	2,120 mm	1,820 mm	2,390 mm

CONTINUOUS SYSTEMS

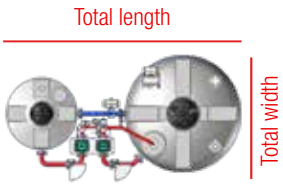

MODELS	HOURLY AVERAGE FLOW [1]	HOURLY PEAK MAXIMUM FLOW [2]	NEUTRALIZATION TANK VOLUME	CHECK TANK VOLUME	DIMENSIONS		
					LENGTH	WIDTH	HEIGHT
CNS-1000	1,000 liters	1,500 liters	1,000 liters	115 liters	2,250 mm	1,190 mm	1,870 mm
CNS-3000	3,000 liters	5,000 liters	2,850 liters	310 liters	2,945 mm	1,670 mm	2,340 mm
CNS-6000	6,000 liters	10,000 liters	6,350 liters	810 liters	3,690 mm	2,200 mm	2,815 mm
CNS-9000	9,000 liters	12,000 liters	8,200 liters	1,000 liters	4,040 mm	2,450 mm	2,755 mm
CNS-12000	12,000 liters	18,000 liters	10,000 liters	1,320 liters	4,665 mm	2,685 mm	2,890 mm

[1] Average flow rate for 60 minutes
[2] Peak flow rate for less than 10 minutes

ACTINI Biopharma

NEUTRALIZATION

Single or Double Batch Systems

NEUTRALIZATION SYSTEMS

ACTINI Batch Neutralization Systems (BNS) are specially designed to neutralize effluent from batch decontamination systems. With various options, these systems can be modulated into full flexible equipment able to handle process wastewaters from other sources.

Function: **pH adjustment system**

Standard features

- Fully automatic neutralization system
- Polyethylene (PE) tanks
- Pumping skid - Centrifugal high flow pump

Optional features

- Neutralization tanks redundancy
- Cooling plate exchanger for effluent over 60°C
- Dedicated electrical cabinet with HMI
- Dedicated chemical drums

BNS MODEL

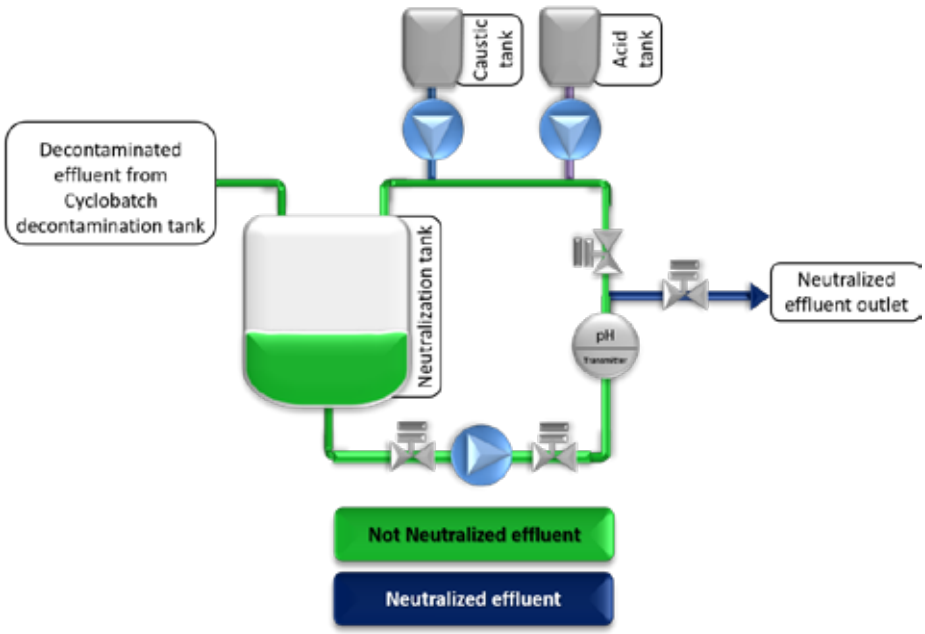

ACTINI Biopharma

NEUTRALIZATION

Continuous Systems

NEUTRALIZATION SYSTEMS

ACTINI Continuous Neutralization Systems (CNS) are specially designed to neutralize effluent from continuous decontamination systems. Our CNS are also able to handle wastes from various sources as CIP drainage, cleaning drainage and other alkaline or acid process wastewaters. These cost-effective systems, able to neutralize high flow rate, are designed to fit in a minimum space area thanks to their small footprint.

Function: **pH adjustment system**

Standard features

- Fully automatic neutralization system
- Polyethylene (PE) tanks
- Pumping skid - Centrifugal high flow pump
- Single-stage neutralization: from an inlet pH between 2 & 12 to an outlet pH between 5.5 & 9.5

Optional features

- Cooling plate exchanger for effluent over 60°C
- Dedicated electrical cabinet with HMI
- Two-stage neutralization: from an inlet pH between 0 & 14 to a more accurate outlet pH between 6.5 & 8
- Dedicated chemical drums

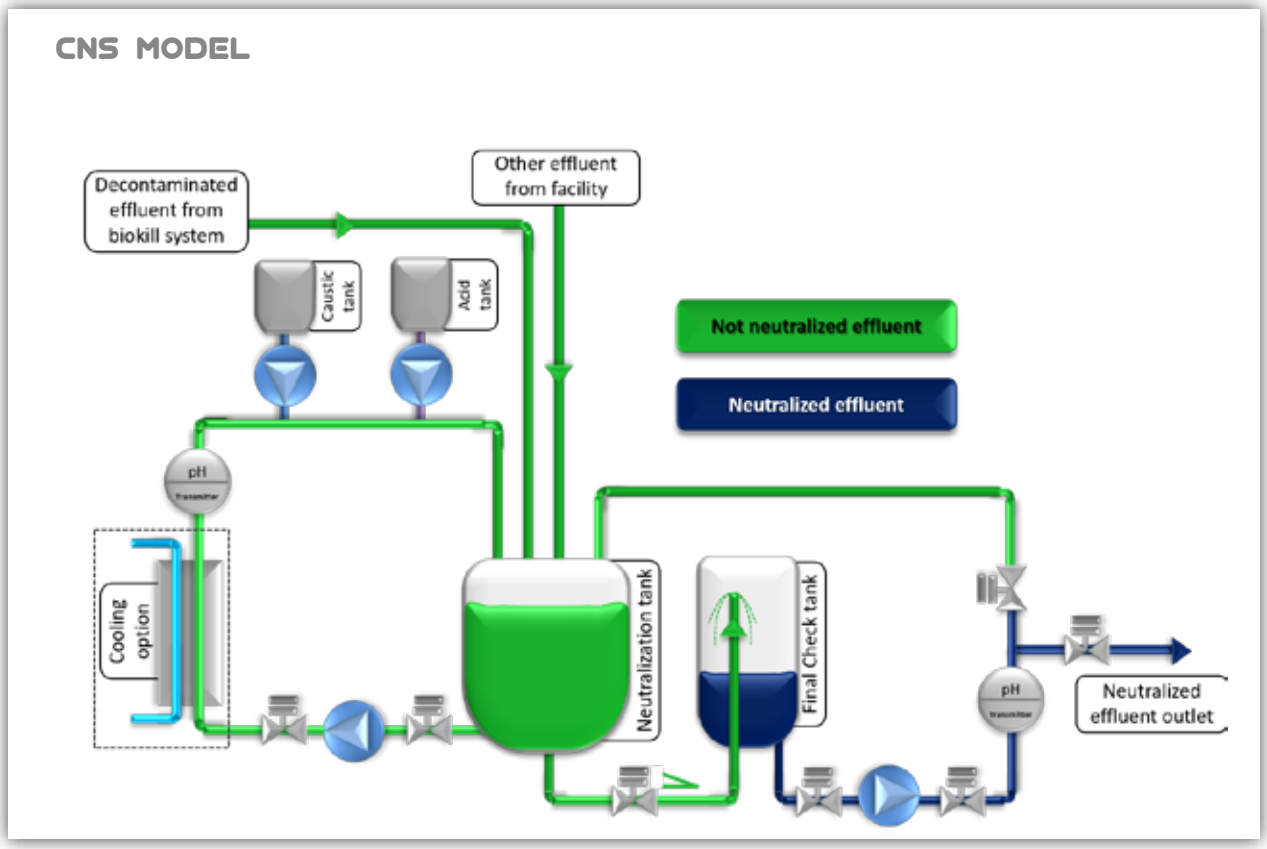

STERILIZATION PRODUCTLINE

ACTINI designs and manufactures a whole range of sterilizers meeting the requirements of pharmaceutical, biotechnological and cosmetic industries, as well the ones of subcontractors and CMOs from these same sectors.

STERILIZER RANGE

Standard and customized treatment solutions

Pilot for Trials Range

Industrial Pilot Range

Production Range

MODELS	HOURLY CAPACITIES*	TECHNOLOGIES	APPLICATIONS
PILOT FOR TRIALS	20 to 500 liters	• Electric heating • Tubular design	• Product tests • Product characterization • Small multi-products series *Possibility of short or long term rental*
INDUSTRIAL PILOT	500 liters 1,000 liters	• Electric or steam heating • Mixed tubular / plate design	• Production of small series • Subcontracting production • Product launch
PRODUCTION STERILIZER	2,000 liters 5,000 liters 10,000 liters 15,000 liters 20,000 liters 40,000 liters	• Steam heating • Mixed tubular / plate design	• Industrial production applications

* Design flow rates based on water-like products (can sterilize products until 200 cP / 20°C at lower flow rate)

ACTINI Biopharma

STERILIZERS

STERILIZATION TECHNOLOGIES

YOUR PRODUCT AT THE CORE OF THE PROCESS

Aware of the challenges connected to the quality of the products sterilized by its equipment and strengthened by its experience, ACTINI offers standard or customized treatment solutions depending on both nature of the products to be treated, sterilization requirements and capacities, and standards of the production environment.

Use: **Sterilization, HTST treatment and inactivation**

Products: **Variable viscosity from 1 to 1,000 cP**

- Nutrient media (agar, glucose solutions, salt, proteins...)
- Fermentation yield
- Active ingredients (peptides, insulin...)
- Plant extracts, sugar-based solutions, flavors...

Design: **Adjustable treatment temperature from 60°C to 150°C**
Modular holding time (4 settings)

Rental: **Possibility of renting the pilot at ACTINI's facility for testing or at Customer's facility**

Modularity and flexibility

- Treatment temperature adjustable according to the products
- Holding time configurable with bridge board
- Possibility of simple or multi-product configuration
- Automatic management of production and cleaning cycles through PLC

Design features focused on the product

- Aseptic tubular exchanger
- Tubular / plate combination for energy recovery and cooling on larger units
- Very accurate temperature regulation eliminating any risk of overheating and damage to the treated solution
- Guaranteed repeatability of recipes
- 100% automatic equipment for secured, monitored and recorded cycle management
- SIP / CIP cycles for perfect process asepsis
- Possibility of cGMP design, CFR compliance, pharmaceutical guidelines and BPE

COMPONENTS

Add-ons

VENTURI TRANSFER PUMP

Actini's Venturi Transfer Pump uses pressurized steam and Venturi effect to pump the effluent from the storage tank to the kill tank. This fully welded component without any moving parts, eliminates any risk of leakage. This steam-powered solution, thanks to its flexibility, can use the same steam source as the kill tank and does not require any power supply. The Venturi Transfer Pump is the most reliable and cost-effective solution for the transfer of hazardous liquids.

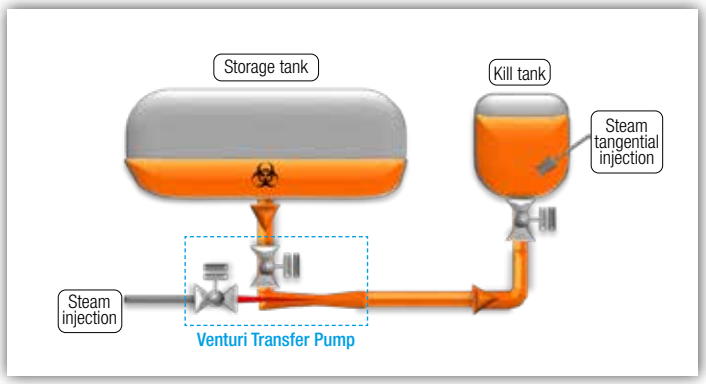

ELECTRIC THERMAL BARRIER (ETB®)

Designed to strengthen valves containment level, this innovative ETB® (Electric Thermal Barrier) is a patented system designed to ensure the biosafety containment at both inlet and outlet of the decontamination system powered with electrical supply only. As alternate to usual Steam Barrier, the ETB® system is compact, easy to install and compliant with pharmaceutical requirements.
Unlike steam-operated systems, the biohazardous waste is contained and inactivated at a configurable temperature setpoint.
This high secured system ensures both hydraulic and bacteriological sealings.

Patent: FR1353515

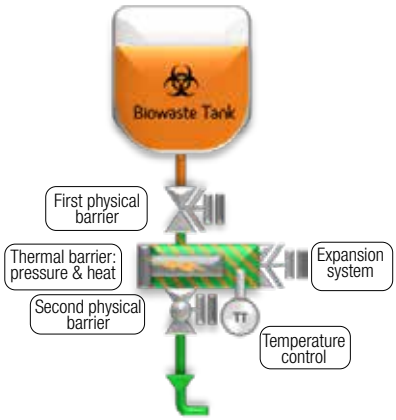

MOBILE CIP

This system is designed to perform cleaning and cold chemical decontamination on tanks before annual maintenance. This manual equipment enables the recirculation of the chemical solution through the spray balls of the tank.
Easy to connect and disconnect thanks to flexible hose connection, the system can be mutualized between several equipment. Light and mobile conception, it can be easily plugged on electrical outlet.

SERVICE PACKAGES

Safety, Serenity, Sustainability

SERVICE PACKAGES

SERVICE PACKAGES	DESCRIPTION
FAT & SAT	FAT and SAT based on our protocols. Qualification services can be made upon request
MAINTENANCE CONTRACT	For periodic maintenance and controls
PERFORMANCE AUDIT	Possibility to check the equipment for OPEX optimization
RETROFIT REVIEW	For capacity, BSL, automation upgrades or equipment replacement
QUALIFICATIONS	Our teams are ar your disposal to define with you protocols and perform BI or thermal mapping qualification services

SPARE PARTS

Emergency part kit

This kit will allow you to have the minimum set of parts required for the most common remedial maintenance operations in stock. You can, with the support of our hotline if you wish, quickly replace wearing parts and avoid penalizing production shutdowns.

One-year operation kit

Particularly suitable for structures with a maintenance department, the «Overhaul» package will allow your teams to have all the parts required for preventive maintenance operations.

Critical part kit

Aware that some of our customers cannot afford a production shutdown in the event of failure of critical components, we offer a breakdown box including a complete spare set for a rapid operational restart.

MAINTENANCE CONTRACT

In order to keep your equipment in its optimal conditions of use, it is essential to perform regular preventive maintenance. You can outsource these services by entrusting them to our teams of experts.

The «PLUS» of our contract packages:

- Scheduled services according to the rate and conditions of use of your machine
- A quality service provided by technicians specialized in hydraulic and thermal processes
- Planned maintenance operations to limit production stoppages
- Management of your replenishment of parts in stock by our technicians
- Free access to our hotline and priority processing of your requests
- Detailed maintenance reports for full traceability

TRAINING - AUDIT

Staff turnover, integration of new operators ... We are at your disposal to study your training needs on the operation of your installations.
ACTINI also offers performance audits and retrofit solutions for your installations and equipment.
Our Engineering and Services structure will work with you to develop training services adapted to your present and future needs.

Head Office & Manufacturing Site
ACTINI SAS
Z.A. de Montigny 3 – Maxilly - 74500 Evian-les-Bains, FRANCE
T. +33 (0)450 83 12 12
E. sales@actini.com

Actini... an international presence for a local support

ACTINI BIOPHARMA

Effluent Decontamination & Sterilization Systems
www.actini.com

ACTINI FOOD+

Pasteurization & Sterilization of Food & Phytosanitary Products
www.actini.com

SOFAST

Preparation & Sterilization Solutions for Pharmaceutical & Cosmetic Liquids
www.sofast-pharma.com

BIOADVISE

Life Sciences Consultancy Services
www.bioadvise.com

02/08/2021